RUSTLER VXL
Chassis Assembly

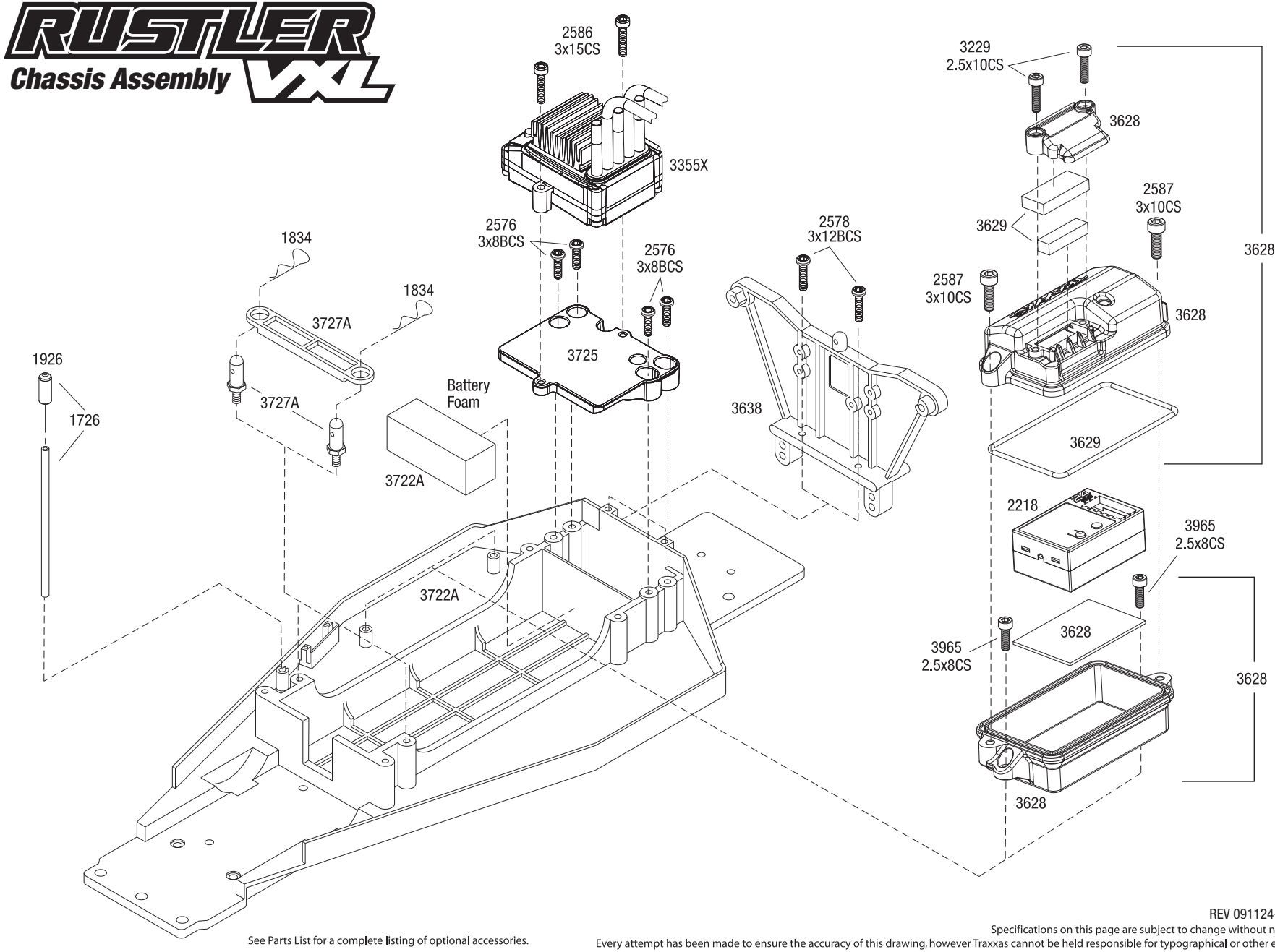

See Parts List for a complete listing of optional accessories.

REV 091124-R01

Specifications on this page are subject to change without notice.
Every attempt has been made to ensure the accuracy of this drawing, however Traxxas cannot be held responsible for typographical or other errors.